DIY Wi-Fi Bot – Overall Wiring
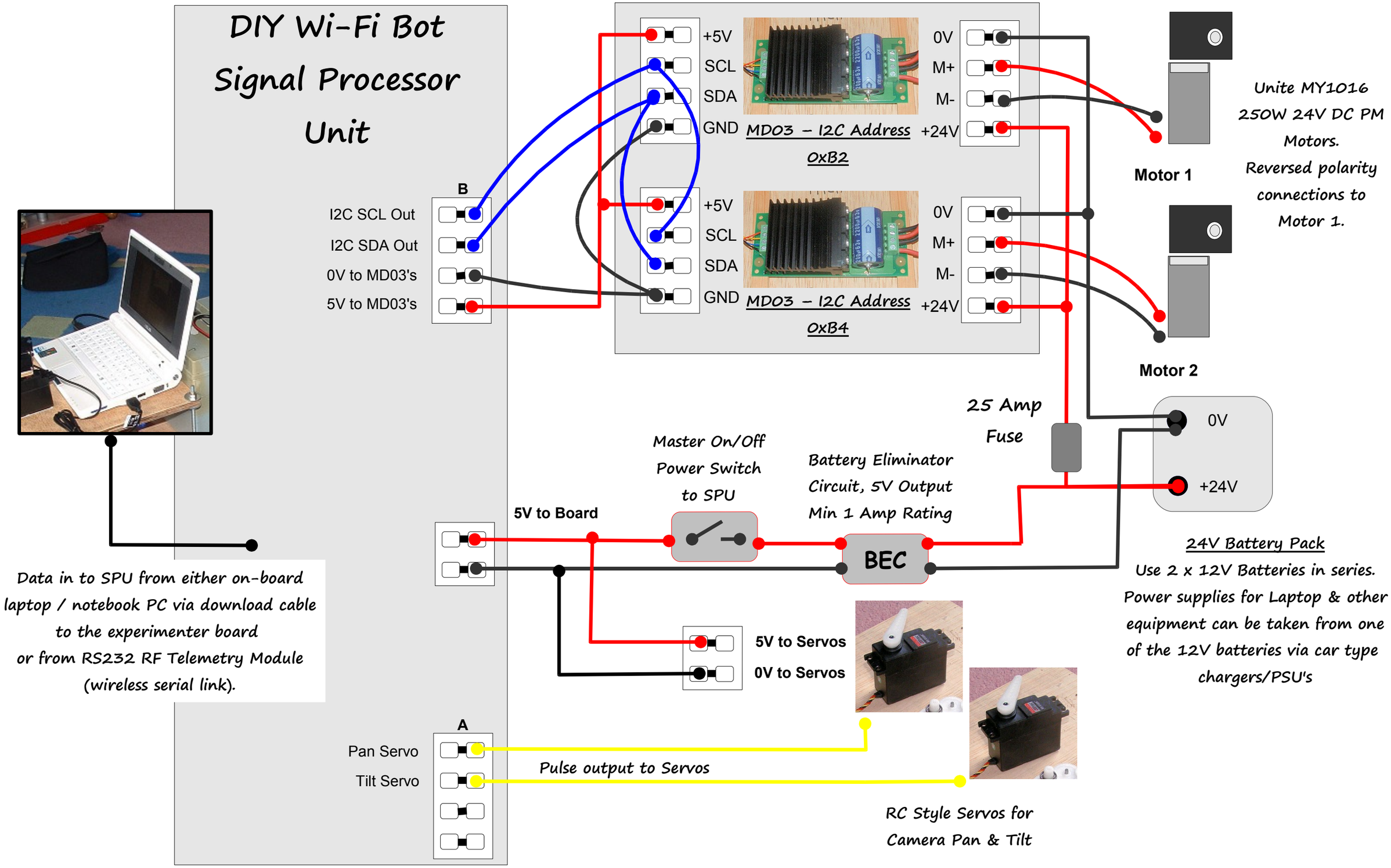
© 2008 BFF Design Ltd, All Rights Reserved