DIY Motion Platform – Control & Drive System Wiring - Enhanced
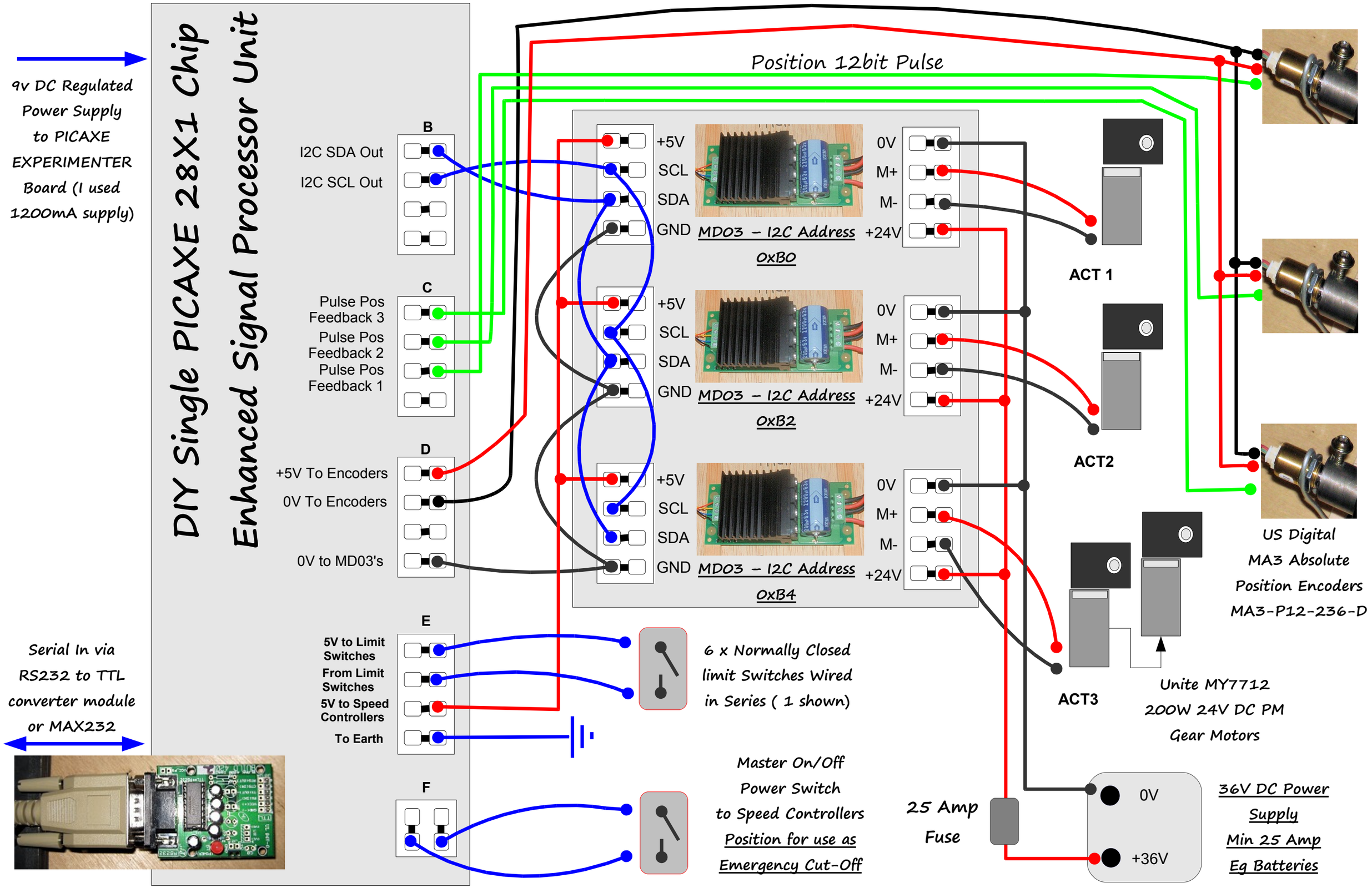
© 2009 BFF Design Ltd, All Rights Reserved